UNIVERSITY OF CAMBRIDGE INTERNATIONAL EXAMINATIONS
General Certificate of Education
Advanced Subsidiary Level and Advanced Level

| | | | | | | | | | |
|---|---|---|---|---|---|---|---|---|---|
| CANDIDATE NAME | | | | | | | | | |
| CENTRE NUMBER | | | | | | CANDIDATE NUMBER | | | | |

*9967083275*

**PHYSICS** **9702/22**

Paper 2 AS Structured Questions **May/June 2012**

**1 hour**

Candidates answer on the Question Paper.

No Additional Materials are required.

**READ THESE INSTRUCTIONS FIRST**

Write your Centre number, candidate number and name on all the work you hand in.
Write in dark blue or black pen.
You may use a soft pencil for any diagrams, graphs or rough working.
Do not use staples, paper clips, highlighters, glue or correction fluid.
DO **NOT** WRITE IN ANY BARCODES.

Answer **all** questions.
You may lose marks if you do not show your working or if you do not use appropriate units.

At the end of the examination, fasten all your work securely together.
The number of marks is given in brackets [ ] at the end of each question or part question.

| For Examiner's Use | |
|---|---|
| 1 | |
| 2 | |
| 3 | |
| 4 | |
| 5 | |
| 6 | |
| 7 | |
| Total | |

This document consists of **15** printed pages and **1** blank page.


© UCLES 2012

**Data**

speed of light in free space, $c = 3.00 \times 10^{8}\ \text{m s}^{-1}$

permeability of free space, $\mu_0 = 4\pi \times 10^{-7}\ \text{H m}^{-1}$

permittivity of free space, $\varepsilon_0 = 8.85 \times 10^{-12}\ \text{F m}^{-1}$

$$\left(\frac{1}{4\pi\varepsilon_0} = 8.99 \cdot\ 10^{9}\ \text{m F}^{-1}\right)$$

elementary charge, $e = 1.60 \times 10^{-19}\ \text{C}$

the Planck constant, $h = 6.63 \times 10^{-34}\ \text{J s}$

unified atomic mass constant, $u = 1.66 \times 10^{-27}\ \text{kg}$

rest mass of electron, $m_e = 9.11 \times 10^{-31}\ \text{kg}$

rest mass of proton, $m_p = 1.67 \times 10^{-27}\ \text{kg}$

molar gas constant, $R = 8.31\ \text{J K}^{-1}\ \text{mol}^{-1}$

the Avogadro constant, $N_A = 6.02 \times 10^{23}\ \text{mol}^{-1}$

the Boltzmann constant, $k = 1.38 \times 10^{-23}\ \text{J K}^{-1}$

gravitational constant, $G = 6.67 \times 10^{-11}\ \text{N m}^2\ \text{kg}^{-2}$

acceleration of free fall, $g = 9.81\ \text{m s}^{-2}$

© UCLES 2012

**Formulae**

uniformly accelerated motion, $s = ut + \frac{1}{2}at^2$
$v^2 = u^2 + 2as$

work done on/by a gas, $W = p\Delta V$

gravitational potential, $\phi = -\frac{Gm}{r}$

hydrostatic pressure, $p = \rho gh$

pressure of an ideal gas, $p = \frac{1}{3}\frac{Nm}{V}\langle c^2 \rangle$

simple harmonic motion, $a = -\omega^2 x$

velocity of particle in s.h.m., $v = v_0 \cos \omega t$
$v = \pm \omega \sqrt{(x_0^2 - x^2)}$

electric potential, $V = \frac{Q}{4\pi\varepsilon_0 r}$

capacitors in series, $1/C = 1/C_1 + 1/C_2 + \ldots$

capacitors in parallel, $C = C_1 + C_2 + \ldots$

energy of charged capacitor, $W = \frac{1}{2}QV$

resistors in series, $R = R_1 + R_2 + \ldots$

resistors in parallel, $1/R = 1/R_1 + 1/R_2 + \ldots$

alternating current/voltage, $x = x_0 \sin \omega t$

radioactive decay, $x = x_0 \exp(-\lambda t)$

decay constant, $\lambda = \frac{0.693}{t_{\frac{1}{2}}}$

© UCLES 2012

**[Turn over**

**BLANK PAGE**

© UCLES 2012

Answer **all** the questions in the spaces provided.

**1** The volume $V$ of liquid flowing in time $t$ through a pipe of radius $r$ is given by the equation

$$\frac{V}{t} = \frac{\pi P r^4}{8Cl}$$

where $P$ is the pressure difference between the ends of the pipe of length $l$, and $C$ depends on the frictional effects of the liquid.

An experiment is performed to determine $C$. The measurements made are shown in Fig. 1.1.

| $\frac{V}{t}$ / $10^{-6}\,m^3\,s^{-1}$ | $P/10^3\,N\,m^{-2}$ | $r$ / mm | $l$ / m |
|---|---|---|---|
| 1.20 ± 0.01 | 2.50 ± 0.05 | 0.75 ± 0.01 | 0.250 ± 0.001 |

**Fig. 1.1**

**(a)** Calculate the value of $C$.

$C$ = ..... $N\,s\,m^{-2}$ [2]

**(b)** Calculate the uncertainty in $C$.

uncertainty = ..... $N\,s\,m^{-2}$ [3]

**(c)** State the value of $C$ and its uncertainty to the appropriate number of significant figures.

$C$ = ..... ± ..... $N\,s\,m^{-2}$ [1]

© UCLES 2012

**2** **(a)** A ball is thrown vertically down towards the ground and rebounds as illustrated in Fig. 2.1.

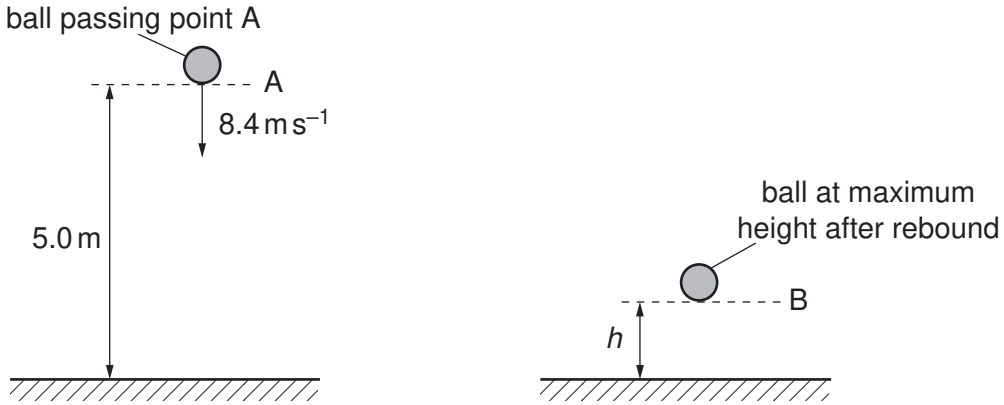


**Fig. 2.1**

As the ball passes A, it has a speed of $8.4\,m\,s^{-1}$. The height of A is 5.0 m above the ground. The ball hits the ground and rebounds to B. Assume that air resistance is negligible.

**(i)** Calculate the speed of the ball as it hits the ground.

speed = ..... $m\,s^{-1}$ [2]

**(ii)** Show that the time taken for the ball to reach the ground is 0.47 s.

[1]

© UCLES 2012

**(b)** The ball rebounds vertically with a speed of $4.2\,m\,s^{-1}$ as it leaves the ground. The time the ball is in contact with the ground is 20 ms. The ball rebounds to a maximum height $h$.

The ball passes A at time $t = 0$. On Fig. 2.2, plot a graph to show the variation with time $t$ of the velocity $v$ of the ball. Continue the graph until the ball has rebounded from the ground and reaches B.

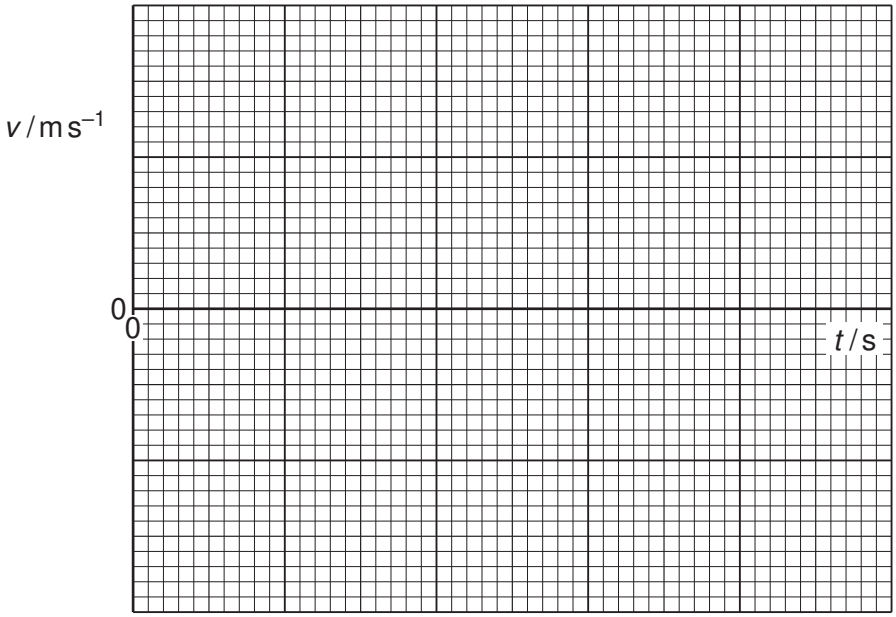


**Fig. 2.2** [3]

**(c)** The ball has a mass of 0.050 kg. It moves from A and reaches B after rebounding.

**(i)** For this motion, calculate the change in

**1.** kinetic energy,

change in kinetic energy = ..... J [2]

**2.** gravitational potential energy.

change in potential energy = ..... J [3]

**(ii)** State and explain the total change in energy of the ball for this motion.

.....

.....

.....

.....[2]

**3** **(a)** State Newton's first law.

.....

.....[1]

**(b)** A log of mass 450 kg is pulled up a slope by a wire attached to a motor, as shown in Fig. 3.1.

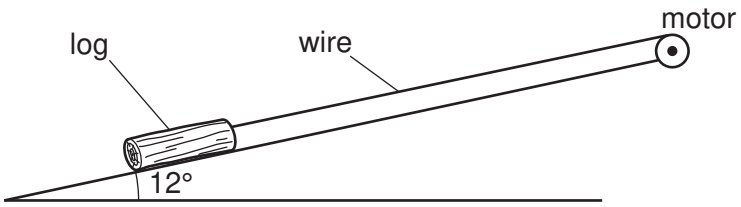


**Fig. 3.1**

The angle that the slope makes with the horizontal is 12°. The frictional force acting on the log is 650 N. The log travels with constant velocity.

**(i)** With reference to the motion of the log, discuss whether the log is in equilibrium.

.....

.....

.....

.....[2]

**(ii)** Calculate the tension in the wire.

tension = ..... N [3]

**(iii)** State and explain whether the gain in the potential energy per unit time of the log is equal to the output power of the motor.

.....

.....

.....

.....[2]

**4** A battery of electromotive force 12V and negligible internal resistance is connected to two resistors and a light-dependent resistor (LDR), as shown in Fig. 4.1.

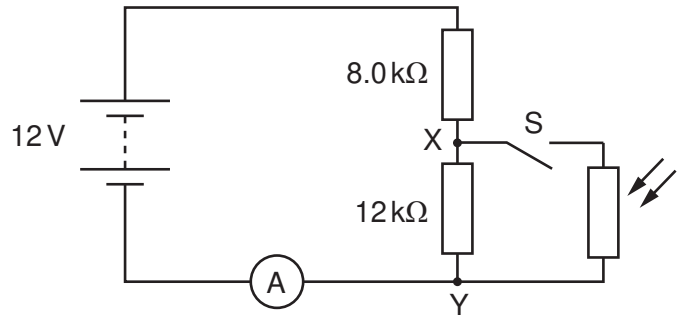


**Fig. 4.1**

An ammeter is connected in series with the battery. The LDR and switch S are connected across the points XY.

**(a)** The switch S is open. Calculate the potential difference (p.d.) across XY.

p. d. = ..... V [3]

**(b)** The switch S is closed. The resistance of the LDR is 4.0 kΩ. Calculate the current in the ammeter.

current = ..... A [3]

© UCLES 2012

**(c)** The switch S remains closed. The intensity of the light on the LDR is increased. State and explain the change to

**(i)** the ammeter reading,

.....

.....

.....[2]

**(ii)** the p.d. across XY.

.....

.....

.....[2]

**5** **(a)** Define the *Young modulus*.

.....

.....[1]

**(b)** A load $F$ is suspended from a fixed point by a steel wire. The variation with extension $x$ of $F$ for the wire is shown in Fig. 5.1.

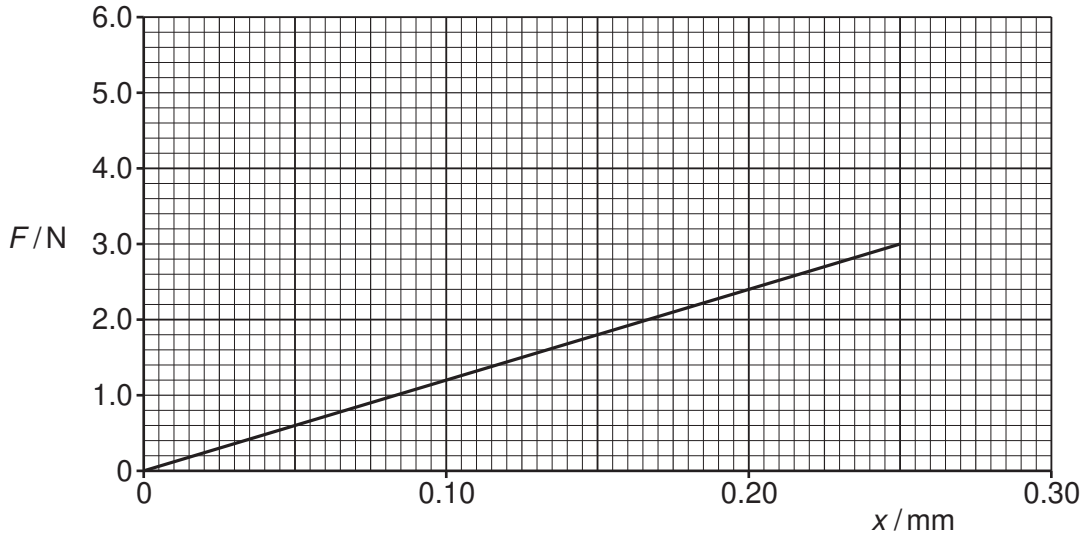


**Fig. 5.1**

**(i)** State two quantities, other than the gradient of the graph in Fig. 5.1, that are required in order to determine the Young modulus of steel.

1. .....

2. .....
[1]

**(ii)** Describe how the quantities you listed in **(i)** may be measured.

.....

.....

.....[2]

© UCLES 2012

**(iii)** A load of 3.0 N is applied to the wire. Use Fig. 5.1 to calculate the energy stored in the wire.

energy = ..... J [2]

**(c)** A copper wire has the same original dimensions as the steel wire. The Young modulus for steel is $2.2 \times 10^{11}\,\text{N m}^{-2}$ and for copper is $1.1 \times 10^{11}\,\text{N m}^{-2}$.

On Fig. 5.1, sketch the variation with $x$ of $F$ for the copper wire for extensions up to 0.25 mm. The copper wire is not extended beyond its limit of proportionality. [2]

**6** **(a)** Use the principle of superposition to explain the formation of a stationary wave.

.....

.....

.....

.....

.....[3]

**(b)** Describe an experiment to determine the wavelength of sound in air using stationary waves. Include a diagram of the apparatus in your answer.

.....

.....

.....

.....

.....

.....

.....

.....

.....

.....[3]

**(c)** The variation with distance $x$ of the intensity $I$ of a stationary sound wave is shown in Fig. 6.1.

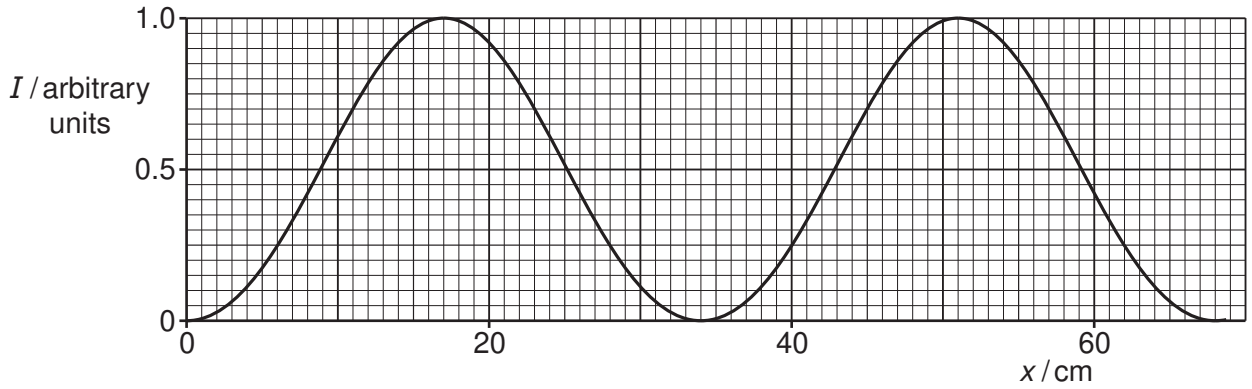


**Fig. 6.1**

**(i)** On the $x$-axis of Fig. 6.1, indicate the positions of all the nodes and antinodes of the stationary wave. Label the nodes **N** and the antinodes **A**. [1]

**(ii)** The speed of sound in air is $340\,m\,s^{-1}$.

Use Fig. 6.1 to determine the frequency of the sound wave.

frequency = ..... Hz [3]

**Please turn over for Question 7.**

**7** **(a)** A nuclear reaction occurs when a uranium-235 nucleus absorbs a neutron. The reaction may be represented by the equation:

$$^{235}_{92}U + {}^{W}_{X}n \longrightarrow {}^{93}_{37}Rb + {}^{141}_{Z}Cs + Y{}^{W}_{X}n$$

State the number represented by the letter

W .....

X .....

Y .....

Z .....

[3]

**(b)** The sum of the masses on the left-hand side of the equation in **(a)** is not the same as the sum of the masses on the right-hand side.

Explain why mass seems not to be conserved.

.....

.....

.....[2]

Permission to reproduce items where third-party owned material protected by copyright is included has been sought and cleared where possible. Every reasonable effort has been made by the publisher (UCLES) to trace copyright holders, but if any items requiring clearance have unwittingly been included, the publisher will be pleased to make amends at the earliest possible opportunity.

University of Cambridge International Examinations is part of the Cambridge Assessment Group. Cambridge Assessment is the brand name of University of Cambridge Local Examinations Syndicate (UCLES), which is itself a department of the University of Cambridge.